Product Data Sheet

Dinky Durham

The Dinky Durham is a mini version of the best selling Durham mug and is available with direct screen print. 100% dishwasher proof. A promotional product that is sure to be kept.

Printed using our revolutionary TruColour® system at no extra cost. Engineered by and exclusive to us, TruColour® enables you to reassure that you can meet the Pantone requirement rather than compromising on colour; even available on dark glazes!

Key Product Information

Product Code:	12149
Commodity Code:	69120023
MOQ:	72
Size:	See Artwork Requirements
Branding Area:	135 x 60mm
Branding Method:	Screen Print
Material:	Stoneware mug
Made In:	UK
PDF Proof:	24-48 Hours
Express Service Available:	48 Hour
Printed Proof Leadtime:	3 Working days
Leadtime:	5 Working days from proof approval
Colour:	White
Weight:	207g
Capacity:	7oz / 185ml

Packaging and Other Information

No Per Carton:	36
Packaging Details:	714 x 486 x 349mm
Carton Weight:	23Kg
Standard Packaging:	MugSafe® Packaging
Alternative Packaging:	MugSafe® Solo

Recommendations and Limitations

QR Codes - Please note that the print process and substrates used in the production of this item may not always allow QR codes, if present on your artwork, to function correctly. When approving your proof, you are accepting that this may be the case and as such accept full liability for any malfunction of the QR code. Please wash mug before use.

The mug base can also be printed in 1 colour, extra charges apply.

Ideal For: Trade Exhibitions, Cafés / Coffee Bars, Corporate Giveaways, Desktop Promotions

Artwork Requirements

MUG LIST

Dinky Durham

Sizes available: Approximate dimensions 80mm tall x 72mm diameter. Please note mugs may vary slightly in size and these details should be used for guidance only.

We can accept artwork by disk, email or you can upload onto our FTP site. Please contact us for details.

Programs:
Mac: QuarkXpress 7, Illustrator, PhotoShop, and Adobe In Design.
PC: PhotoShop and Adobe InDesign

Please supply us with:
- Finished version of the artwork.
- All of the source files used to create the finished version, including all high resolution scans, all screen and printer fonts
Label the disk with job title and return address.

All artwork supplied must be fully editable. The finished version should be supplied as a CYMK file (plus spot colour separations.)

Please note text must be no smaller than 8pt (15pt for etched mugs) and reversed out text should be larger and in bold.

Emailed artwork must be clearly labelled with your order number and company name in the reference line, or supplied on CD with the same information clearly marked. 4 colour process artwork needs to be 300dpi or higher.

Supply a print out:
Black and white or from a low-cost colour printer using the right file, not an earlier version. Label with PMS references for all corporate colours or other critical colour matches. Supply colour samples or swatches at the outset. Customer supplied printouts cannot be matched because there is no consistency of calibration between their machine and our press.

For Screen Printed designs please supply the following:
- Editable EPS file
- Image saved at 100% size or larger
- Pantone® references supplied for colours
- Fonts supplied or text saved as curves

Due to nature of this product tight registration may be difficult - registration may move by up to 3mm on screen print.

If you would like further information regarding a specific design, please feel free to contact us

See the following page(s) for the artwork templates for this product.

All information correct at time of publication. Whilst we endeavour to maintain the accuracy of this document, details may change without notice.

Job Information	Print Information	Artwork Advisory

Job No: 393444
Description: Sample
Product: Dinky Durham
Colour: White
Proof No: 1
Date: 14/06/2014
Repro: AE

Process: Screen
Dimensions: 135 x 60mm
Colour(s): 5

- Pantone xxxx
- Pantone xxxx
- Pantone xxxx
- Pantone xxxx
- Pantone xxxx

Where spot colour references are not supplied
we will apply a Pantone for you

All dimensions are +/- manufacturing tolerances

*Faces indicate a right hand drinker,

Screen printed detail
must be at least 1pt (0.353mm) thick

Text should be minimum 8pt to remain legible.
Light text on a dark background
will reproduce better if bold

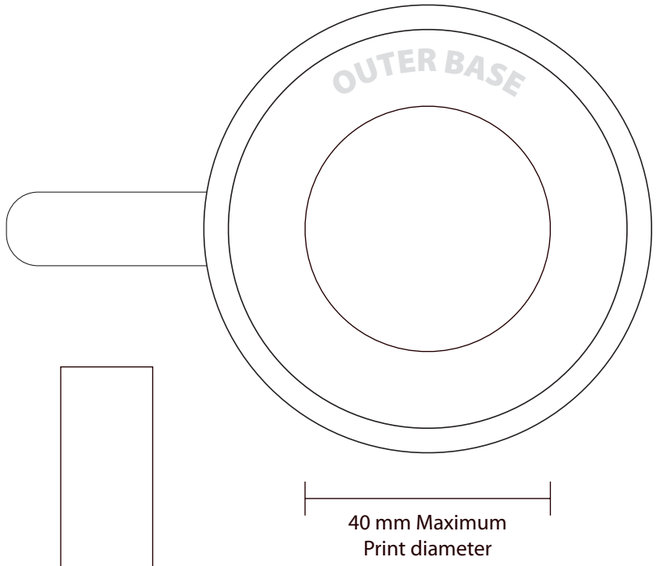

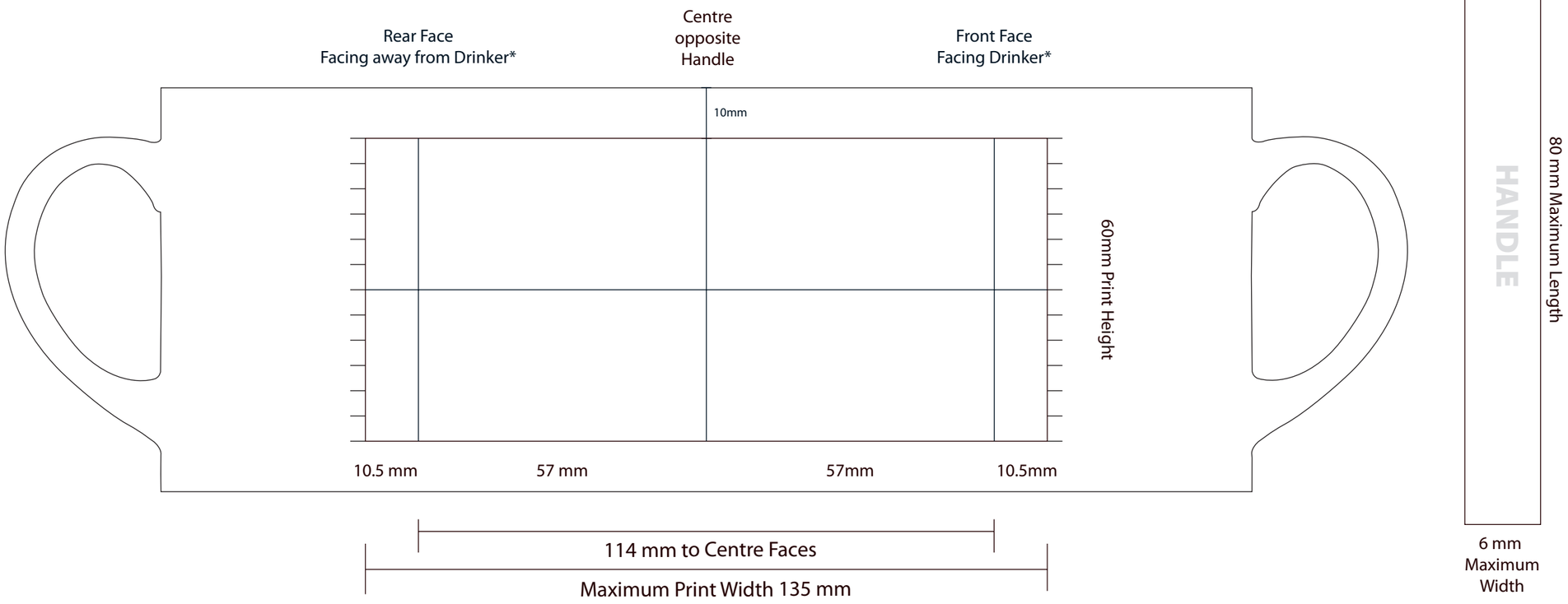

Due to variations beyond our control and the nature of the print process the colour on the pdf may differ from that on the final product.

12149 Dinky Durham