Product Data Sheet

Marrow Mug

Mugs have been voted one of the top five most effective promotional products. One of the most popular stoneware mug styles, the Marrow comes in a choice of black, white or midnight blue. 100% dishwasher proof. Your design is screen printed. The average person has 6 hot drinks a day - make sure your brand is on their mug!

Printed using our revolutionary TruColour® system at no extra cost. Engineered by and exclusive to us, TruColour® enables you to reassure that you can meet the Pantone requirement rather than compromising on colour; even available on dark glazes!

Key Product Information

Product Code:	12171
Commodity Code:	69120023
MOQ:	72
Size:	See Artwork Requirements
Branding Area:	185 x 40mm
Branding Method:	Screen Print
Material:	Stoneware mug
Made In:	UK
PDF Proof:	24-48 Hours
Express Service Available:	48 Hour
Printed Proof Leadtime:	3 Working days
Leadtime:	5 Working days from proof approval
Colour:	Black, White, Midnight Blue, Duo Black/White, Duo Red/White
Weight:	325g
Capacity:	13oz / 370ml

Packaging and Other Information

No Per Carton:	72
Packaging Details:	714 x 486 x 387mm
Carton Weight:	30.2Kg
Standard Packaging:	MugSafe® Packaging
Alternative Packaging:	Single mailing carton, Acetate, 4 or 6up boxes, MugSafe® Solo

Recommendations and Limitations

QR Codes - Please note that the print process and substrates used in the production of this item may not always allow QR codes, if present on your artwork, to function correctly. When approving your proof, you are accepting that this may be the case and as such accept full liability for any malfunction of the QR code. Please wash mug before use.

The mug base can also be printed in 1 colour, extra charges apply.

Ideal For: Trade Exhibitions, Cafés / Coffee Bars, Corporate Giveaways, Desktop Promotions

Artwork Requirements

Marrow Mug

Sizes available: Approximate dimensions 107mm tall x 85mm diameter. Please note mugs may vary slightly in size and these details should be used for guidance only.

We can accept artwork by disk, email or you can upload onto our FTP site. Please contact us for details.

Programs:
Mac: QuarkXpress 7, Illustrator, PhotoShop, and Adobe In Design.
PC: PhotoShop and Adobe InDesign

Please supply us with:
- Finished version of the artwork.
- All of the source files used to create the finished version, including all high resolution scans, all screen and printer fonts
Label the disk with job title and return address.

All artwork supplied must be fully editable. The finished version should be supplied as a CYMK file (plus spot colour separations.)

Please note text must be no smaller than 8pt (15pt for etched mugs) and reversed out text should be larger and in bold.

Emailed artwork must be clearly labelled with your order number and company name in the reference line, or supplied on CD with the same information clearly marked. 4 colour process artwork needs to be 300dpi or higher.

Supply a print out:
Black and white or from a low-cost colour printer using the right file, not an earlier version. Label with PMS references for all corporate colours or other critical colour matches. Supply colour samples or swatches at the outset. Customer supplied printouts cannot be matched because there is no consistency of calibration between their machine and our press.

For Screen Printed designs please supply the following:
- Editable EPS file
- Image saved at 100% size or larger
- Pantone® references supplied for colours
- Fonts supplied or text saved as curves

Due to nature of this product tight registration may be difficult - registration may move by up to 3mm on screen print.

If you would like further information regarding a specific design, please feel free to contact us

See the following page(s) for the artwork templates for this product.

All information correct at time of publication. Whilst we endeavour to maintain the accuracy of this document, details may change without notice.

Job Information	Print Information	Artwork Advisory
Job No: 402444 **Description:** Sample **Product:** Marrow **Colour:** White **Proof No:** 15 **Date:** 07/01/2015 **Repro:** AE	**Process:** Screen **Dimensions:** 185 x 40mm **Colour(s):** 5 Pantone xxxx Pantone xxxx Pantone xxxx Pantone xxxx Pantone xxxx Where spot colour references are not supplied we will apply a Pantone for you	**All dimensions are +/- manufacturing tolerances** *Faces indicate a right hand drinker, Screen printed detail must be at least 1pt (0.353mm) thick Text should be minimum 8pt to remain legible. Light text on a dark background will reproduce better if bold

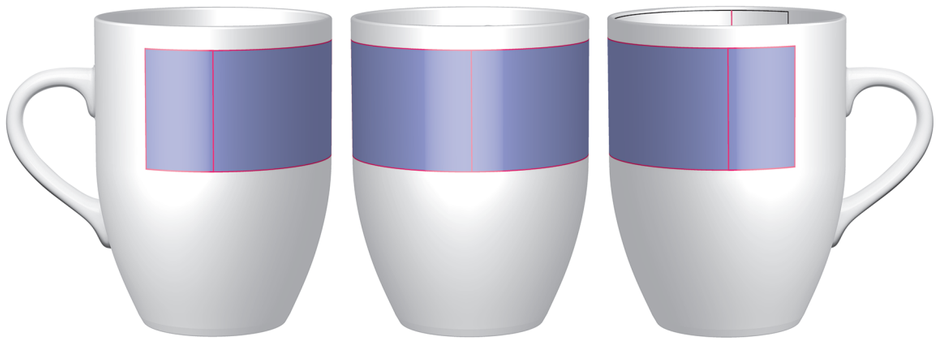

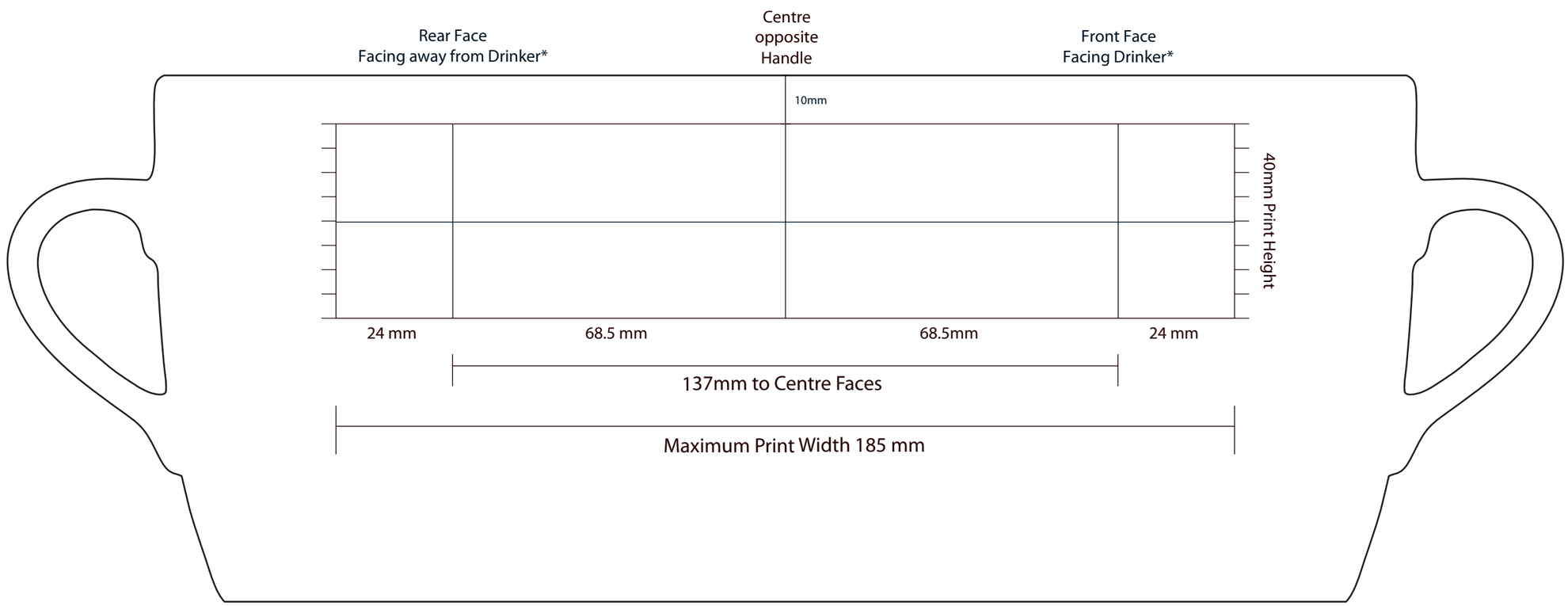

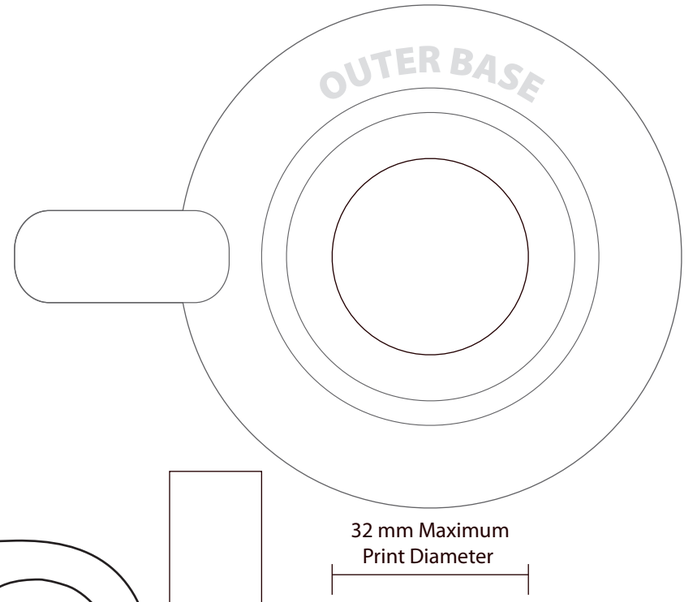

12171 Marrow

Due to variations beyond our control and the nature of the print process the colour on the pdf may differ from that on the final product.